MODEL DL2500A

2500lb/1135kg CAPACITY
PULLING WINCH

FRONT & SIDE VIEW

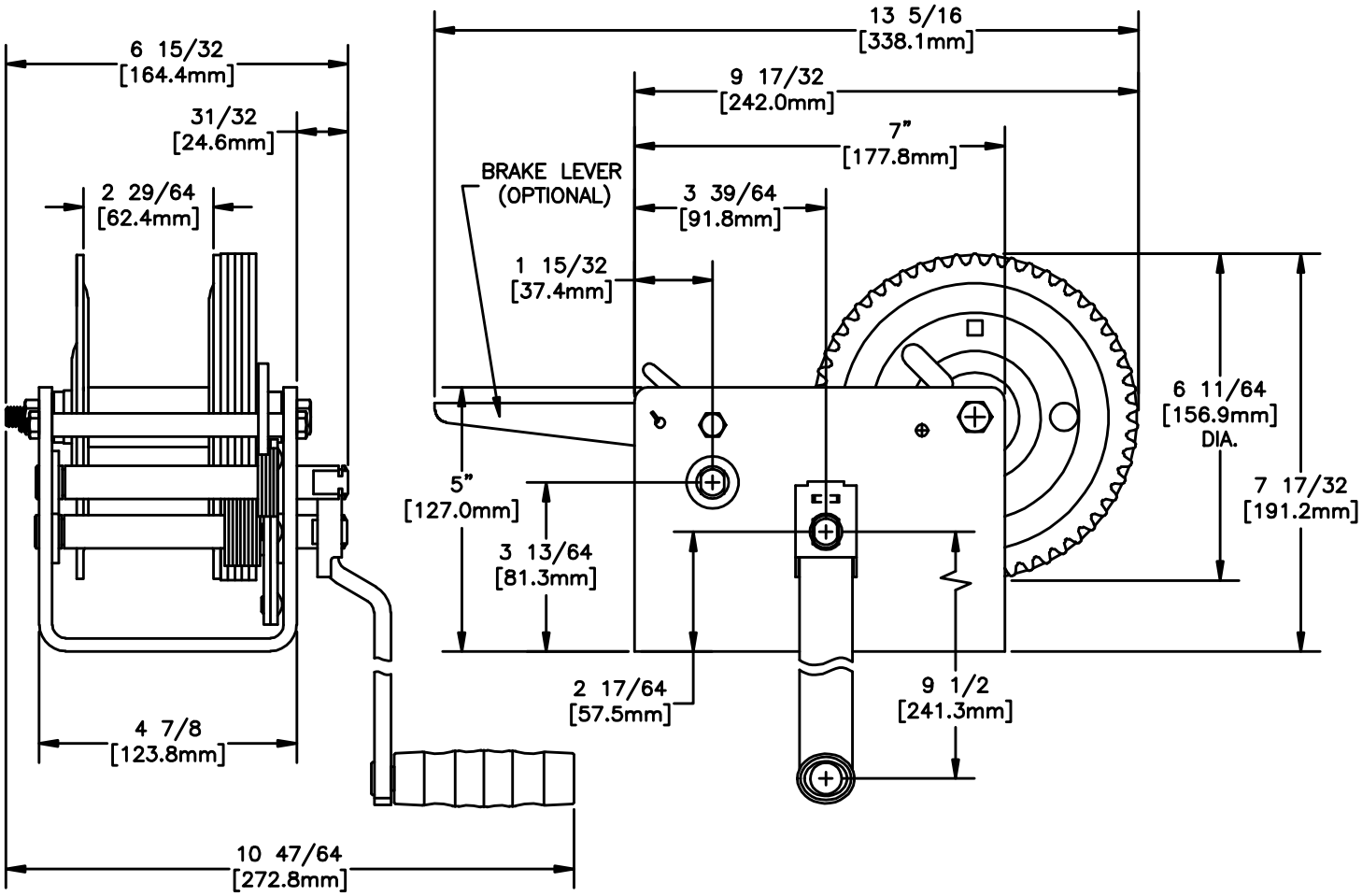
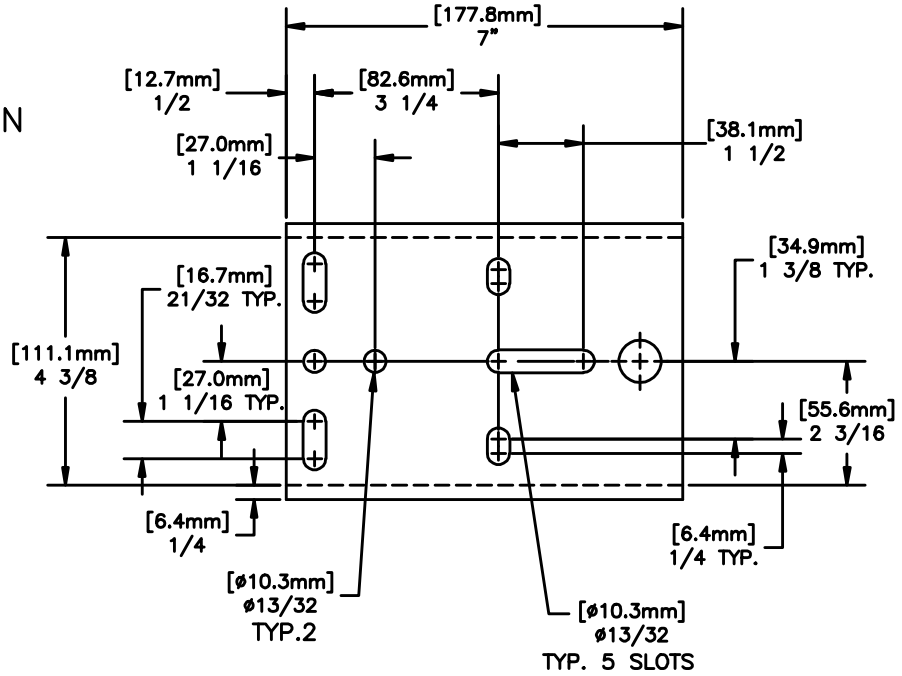
BASE HOLE PATTERN